examunion

Certified IT Exam Material Authority

Accurate study guides, High passing rate!
We offer free update service for one year!
http://www.examunion.com

Exam : HPE6-A45

Title : Implementing Aruba Campus Switching solutions

Version : DEMO

1.Refer to the exhibit.

```
radius-server key password
radius-server host 10.1.10.10 dyn-authorization
radius-server host 10.1.10.11 dyn-authorization
```

AOS-Switches will enforce 802.1X authentication on edge ports. The company has two RADIUS servers, which are meant to provide redundancy and load sharing of requests. The exhibit shows the planned RADIUS settings to deploy to the switches.

What should customers understand about this plan?

A. AOS switches do not support two RADIUS servers for redundancy, instead, a secondary authentication method is required.

B. Dynamic authentication is only permitted on one of the RADIUS servers and must be removed from the other.

C. Each RADIUS server must use a unique port number for the authentication and dynamic authorization port.

D. Each AOS-Switch will send all RADIUS requests to the first server on the list unless that server becomes unreachable.

Answer: D

2.An administrator wants to ensure that an AOS-Switch forwards all traffic that it receives on interface 1 with high priority.

- Switches should also communicate the high priority to other switches across the traffic path.
- The switch has type of service disabled.
- The administrator plans to apply 802.1p priority 5 to interface 1.

What should the administrator check to ensure that the configuration will work properly?

A. Interface 1 receives traffic with a tag.

B. The AOS-Switch is configured to use eight queues.

C. The forwarding path for the traffic uses VLAN tags.

D. An 802.1p-to-DSCP map exists for priority 5.

Answer: A

3.Refer to the exhibit.

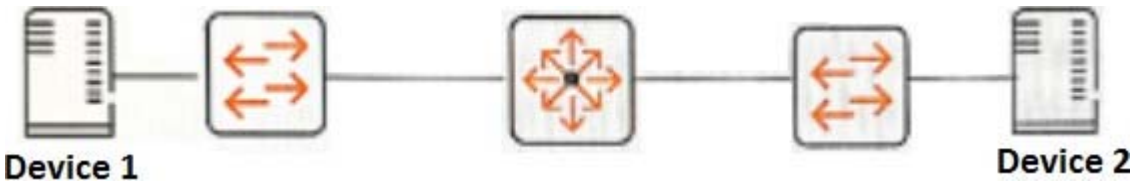

A network administrator sets up prioritization for an application that runs between Device 1 and Device 2. However, the QoS for the application is not what the administrator expects.

How can the administrator check if the network infrastructure prioritizes traffic from Device 1 and Device 2?

A. Run a packet capture on Device 2, run the application, and look in the packet capture for a high value DSCP in the IP header.

B. Set up RMON alarms on the switches that trigger when a high number of packets are dropped. Then, run the application and check for the alarm.

C. Clear interface statistics on the switches. Then, run the application and check the interface queue statistics for the switch-to-switch links.
D. Run a packet capture on Device 1, run the application, and look in the packet capture for a high value DSCP in the IP header.
Answer: A

4.Refer to the exhibits.
Exhibit 1.

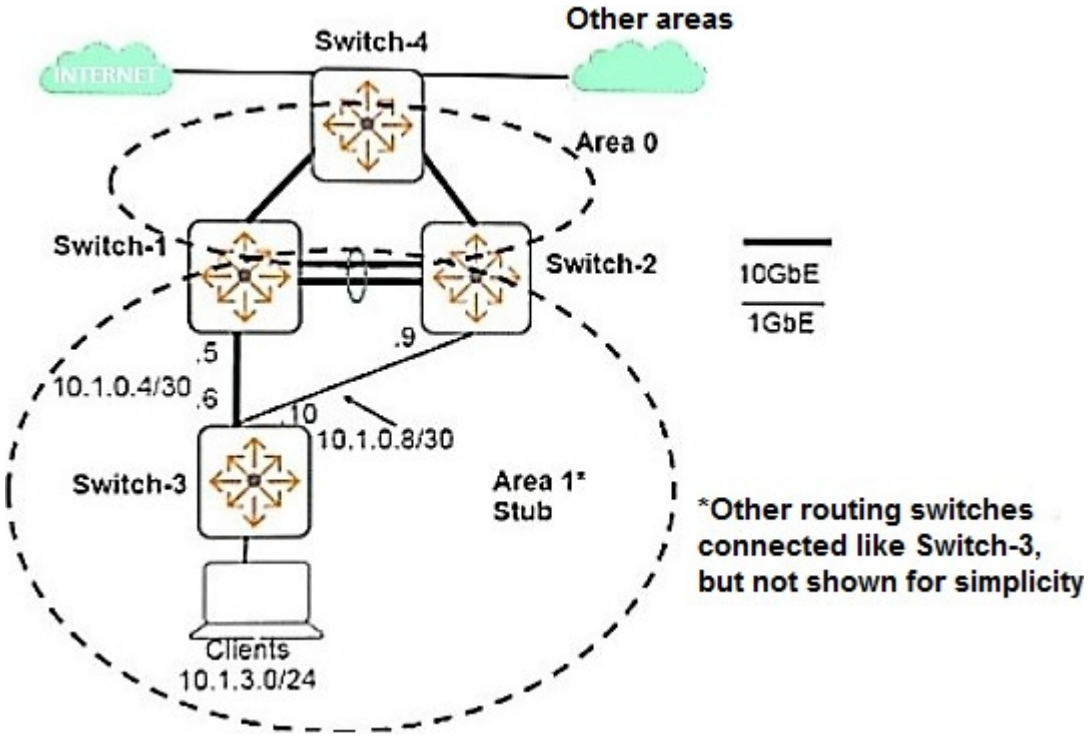

Exhibit 2.

```
Switch-3(config)# show ip route
IP Route Entries
Destination      Gateway     VLAN Type       Sub-Type   Metric     Dist.
--------------- --------    ---------       --------- -------    ------
0.0.0.0/0        10.1.0.5    104  ospf       InterArea  2          110
0.0.0.0/0        10.1.0.9    108  ospf       InterArea  2          110
10.1.0.4/30      ToSwitch-1  104  connected             1          0
10.1.0.8/30      ToSwitch-2  108  connected             1          0
10.1.3.0/24      Clients     130  connected             1          0
10.1.4.0/24      10.1.0.5    104  ospf       IntraArea  3          110
10.1.4.0/24      10.1.0.9    108  ospf       IntraArea  3          110
10.2.0.0/16      10.1.0.5    104  ospf       InterArea  2          110
10.2.0.0/16      10.1.0.9    108  ospf       InterArea  2          110
127.0.0.0/8      reject           static                0          0
127.0.0.1/32     lo0              connected             1          0
```

The exhibits show the current operational state for routes on Switch-3. The company wants Switch-3 to prefer the link to Switch-1 over the link to Switch-2 for all intra-area, inter-area, and external traffic.
What can the network administrator do to achieve this goal?

A. Set the OSPF cost on VLAN 108 higher than 1 on Switch-2 and Switch-3.
B. Set the OSPF administrative distance on Switch-2 higher than 110.
C. Set the OSPF area type to normal on all of the switches in Area 1.
D. Set the cost in the OSPF Area 1 stub command higher than 1 on Switch-2.
Answer: D

5.An AOS-Switch implements tunneled node.
Which benefit does the PAPI enhanced security key provide?
A. It validates the signature for firmware pushed to the switch dynamically.
B. It encrypts traffic sent and received by tunneled-node endpoints.
C. It authenticates control traffic between the switch and its Mobility Controller.
D. It provides an extra layer of authentication for endpoints on tunneled-node ports.
Answer: C